C.2: Validé

| MASS ± 5% (g) | |
|---|---|
| Male module | 6,75 |
| Female module | 8,4 |

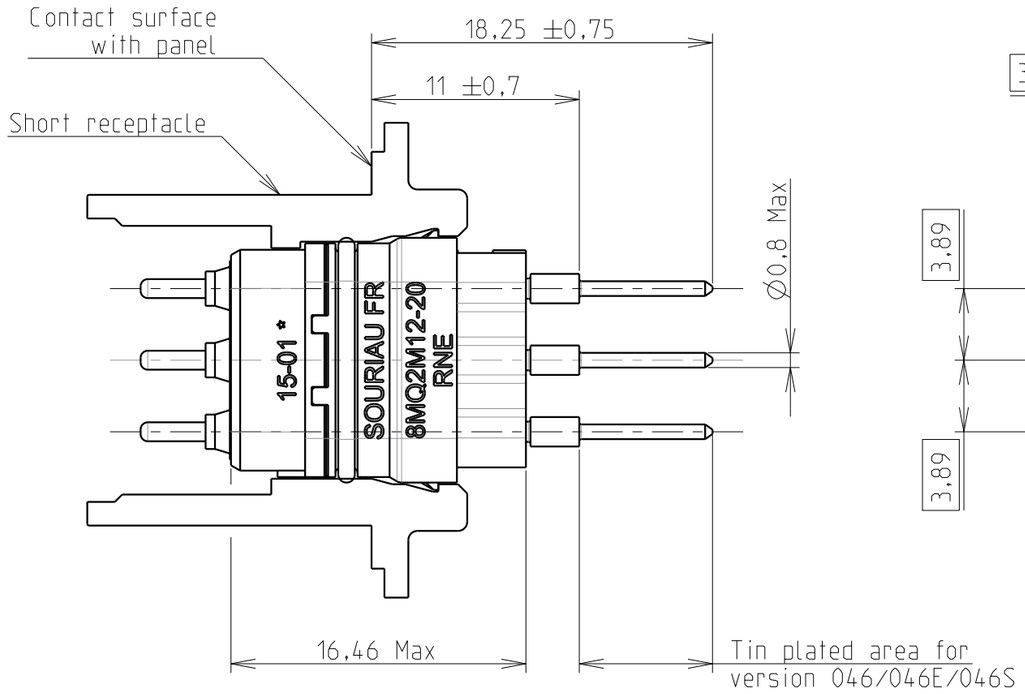


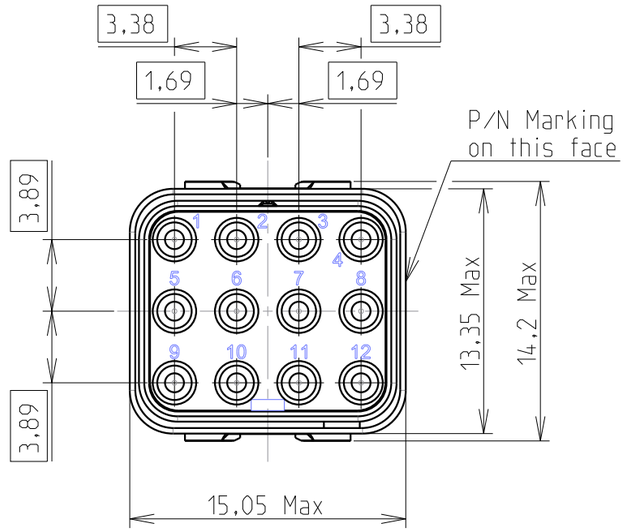


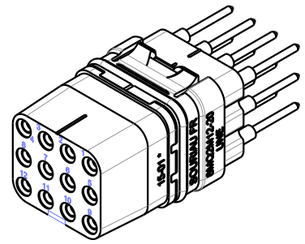

ECHELLE 3/2

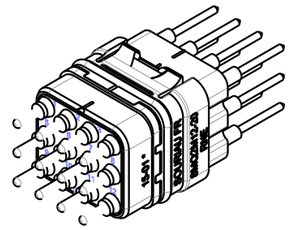

ECHELLE 3/2

## Technical requirements

1- According to EN4165
2- Voltage proof test (Sea level) :
   - #20 > 1500 V r.m.s.
3- Insulation resistance > 5000 MΩ
4- Climatic sequence : -55 °C/+175 °C
5- Fluid resistance : See standard EN 4165-001 (table 40)
6- Contact retention in insert :
   - #20 = 67 N
7- Materials : Thermoplastic and silicone
8- Delivered with protection cap

Female module dimension

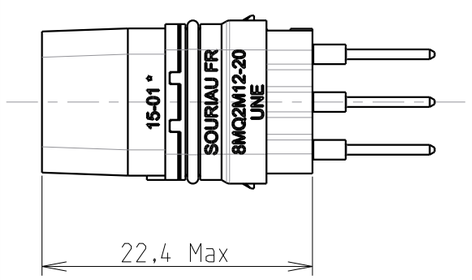


(other dimensions are available for male and female module)

| BASIC SERIE | 8MQ | 2 | M | 12-20 | R | N | E | S | - |
|---|---|---|---|---|---|---|---|---|---|

2 = Serie 2

M = Module

Layout
Dash = No grounding

R = Male module delivered with contacts
U = Female module delivered with contacts

N, A, B, C, D = polarization

None = Without peripheral sealing
E = With peripheral sealing

S = Delivered with protection cap

None = Pin contact : Gold plated, 0.8 µm mini
046 = Pin contact : Tin plated over gold - SnPb
046E = Pin contact : Tin plated over gold - Sn100
046S = Pin contact : Tin plated over gold - SAC305



| Country | Jurisdiction & Control List |
|---|---|
| FR | NOT LISTED |

P/N : SEE TABLE

| ISS | DATE | Latest modification - by: | MOD N° |
|---|---|---|---|
| C | 04/10/18 | Update of contact position<br>-- | 23536BH |

Designed by: N.AUFFRET Date:30/03/17

CUSTOMER DRAWING

TITLE: MODULES WITH STRAIGHT PCB CONTACTS - LAYOUT 12-20
GAMME 8MQ

Scale 3/1

General linear Tolerances: ± --

NPRDS / PROJECT BE164803A

Esterline Connection Technologies

WWW.SOURIAU.COM



FORMAT A3

SOURIAU DRG N° C009-8MQ-A

SHEET 1 / 1